INTRODUCTION

To the owner or user: The service manual you are reading is intended to provide you, and the maintenance or service technician with the information needed to install, start up, clean, maintain, and service this ice maker-dispenser.

The ND750 is a combination nugget ice maker and countertop dispenser. A water station is standard.

The ND750 ice making section is equipped with the following features: electronic controls for bin level and low water; thermostatic expansion valve; front service for most components; and R502 refrigerant. The ice dispensing section is a seamless plastic storage bin, with a stainless steel ice agitator at the bottom to sweep the ice into the dispensing chute.

TABLE OF CONTENTS

For the Installer

- Specifications . . . . . Page 2
- Location/Assembly . . . . . Page 3

For the Plumber . . . . . Page 4

For the Electrician . . . . . Page 5

Final Check List . . . . . Page 6

Inital Start Up . . . . . Page 7

Component Description . . . . . Page 8

Electrical Sequence . . . . . Page 11

Operation . . . . . Page 12

Maintenance and Cleaning . . . . . Page 15

Service Diagnosis . . . . . Page 18

Removal and Replacement

- Reservoir & Bin Controls . . . . . Page 23
- Bearing and Breaker . . . . . Page 24
- Auger . . . . . Page 25
- Water Seal . . . . . Page 26
- Evaporator . . . . . Page 27
- Gearmotor . . . . . Page 28

Electronic Circuit Tester . . . . . Page 29

Wiring diagrams and parts lists are located in the middle of this manual, printed on yellow paper.

ND750

FOR THE INSTALLER: Specifications

This ice maker-dispenser is designed to be mounted on a machine stand, or a countertop. Before beginning the installation, check that all the materials and kits required are available at the installation location.

Scotsman Ice Systems are designed and manufactured with the highest regard for safety and performance. They meet or exceed the standards of U.L., N.S.F., and C.S.A.

Scotsman assumes no liability or responsibility of any kind for products manufactured by Scotsman that have been altered in any way, including the use of any parts and/or other components not specifically approved by Scotsman.

Scotsman reserves the right to make design changes and/or improvements at any time. Specifications and designs are subject to change without notice.

Water Limitations:

An ice machine is a food manufacturing plant; it takes in a raw material, water, and turns it into a food product, ice. The purity of the water is very important in obtaining pure ice and in maximizing product life.

General recommendations are:

1. Filter the water used to produce ice.
2. Check with a water treatment specialist for a water test, and any recommendations regarding filters and treatment.

BACK VIEW

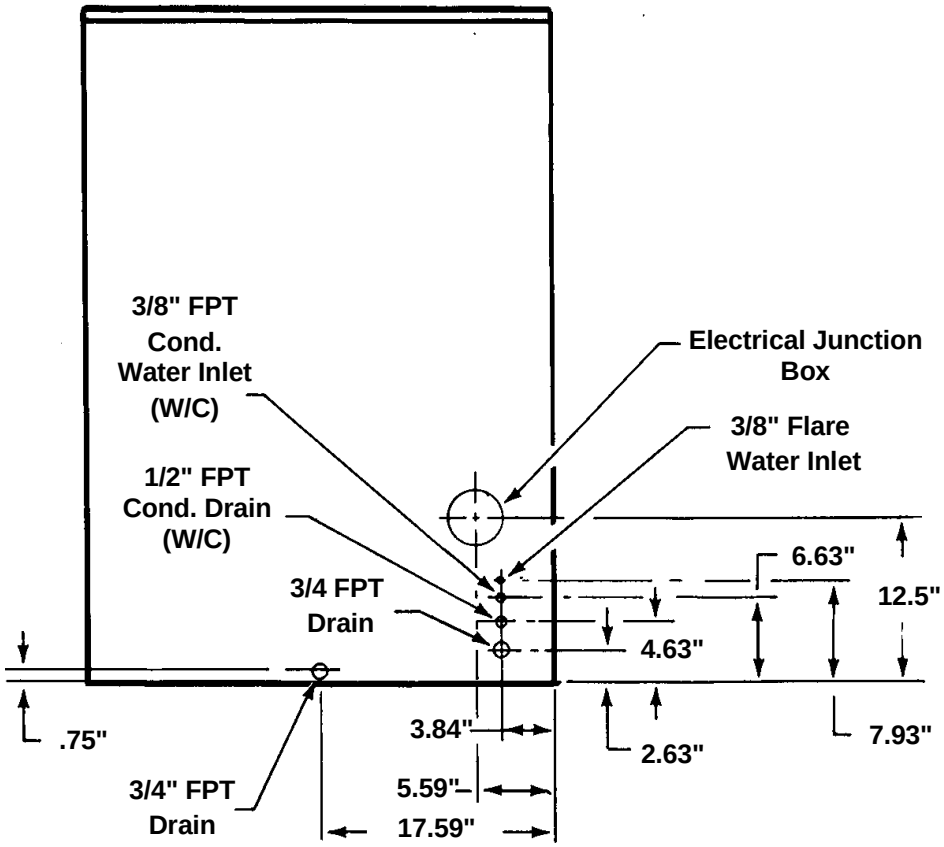

SPECIFCATIONS

Model Number	Dimensions (w/o stand) H" x W" X D"	Ice Type	Condenser Type	Bin Capacity	Basic Electrical	Minimum Circuit Ampacity+	Maximum Fuse Size
ND750AE-1 ND750WE-1	45.74" x 35.18" x 29.26" same	Nugget same	Air Water	110 lbs. same	115/60/1 same	19.8 18.4	30 30

+ Minimum Circuit Ampacity is used to determine wire size and type per National Electric Code.

FOR THE INSTALLER

Location

This ice system is designed to be installed indoors, in a controlled environment.

	Minimum	Maximum
Air Temp	50^0F.	100^0F.
Water Temp	40^0F.	100^0F.
Water Pressure	20 psi	80 psi
Voltage	104	126

Operating the machine oustide of the above limitations, or outdoors, is potentially damaging to the machine; also it is misuse of the machine which may void the warranty.

Service Limitations

Do not install in a location where the top of the machine is within 6" of a fixed ceiling. Air cooled models require a minimum of 6 inches to the left and right of the machine for air circulation. It is important that the machine be installed in a location where it has enough space above and behind it for service.

After uncrating and inspection, the unit is ready for installation.

Machine Stand Installation

Tip the stand on it's back and install the legs, return the stand to the upright position. Adjust leg levelers so that the stand does not "rock".

Counter Top or Machine Stand Installation

The base of the icemaker-dispenser must be sealed to the object it rests upon. Food grade silastic sealant such as Scotsman part number 19-0529-01 is recommended.

Place a bead of the sealant on the machine stand or counter top to match the outside edge of the cabinet base and sink.

The icemaker-dispenser is heavy: use of a mechanical hoist is recommended to lift it to the height required to install it.

The DMS machine stand has holes in the top that match up with threaded holes in the base of the machine. Secure the machine stand to the base with 4 5/16" bolts.

In both counter top and machine stand installations, wipe off and neatly smooth any excess sealant. Level the machine stand and cabinet.

Unpack and install the sink brackets. Fit the sink assembly onto the two sink brackets, and press onto the bead of sealant. Wipe off and neatly smooth any excess sealant from under the sink edge. Connect the sink drain to the dispenser drain system.

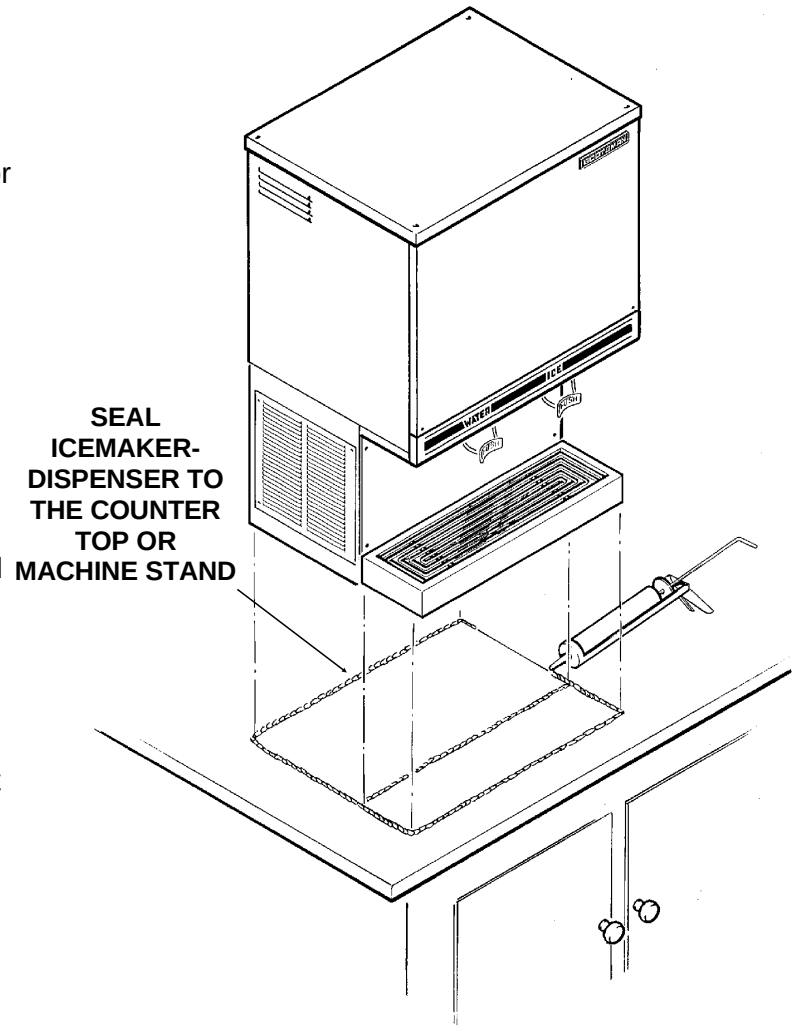

CONFORM TO ALL APPLICABLE CODES

Water Inlet

Air Cooled Models: The recommended water supply is clean, cold water. Use 3/8" O.D. copper tubing, connect to the 3/8" male flare at the back of the cabinet. Install a hand valve near the machine to control the water supply.

Water Treatment: In most areas, a water filter of some type will be useful. In areas where the water is highly concentrated with minerals the water should be tested by a water treatment specialist, and the recommendations of the specialist regarding filtration and/or treatment should be followed.

Water Cooled Models: A separate 3/8" O.D. copper line is recommended, with a separate hand valve to control it. It is connected to a 3/8" FPT condenser inlet at the back of the cabinet. The water pressure to all lines must always be above 20 psig, and below 120 psig.

Drains

Air Cooled Models: There is one 3/4" FPT drain

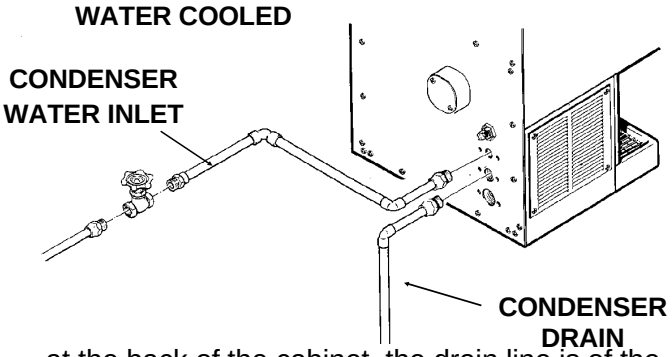

at the back of the cabinet, the drain line is of the gravity type, and 1/4 inch per foot fall is an acceptable pitch for the drain tubing. There should be a vent at the highest point of the drain line, and the ideal drain receptacle would be a trapped and vented floor drain. Use only 3/4" rigid tubing.

Water Cooled Models: In addition to the above mentioned drain, a separate condenser drain must be installed. Connect it to the 1/2" condenser drain connection at the back of the cabinet.

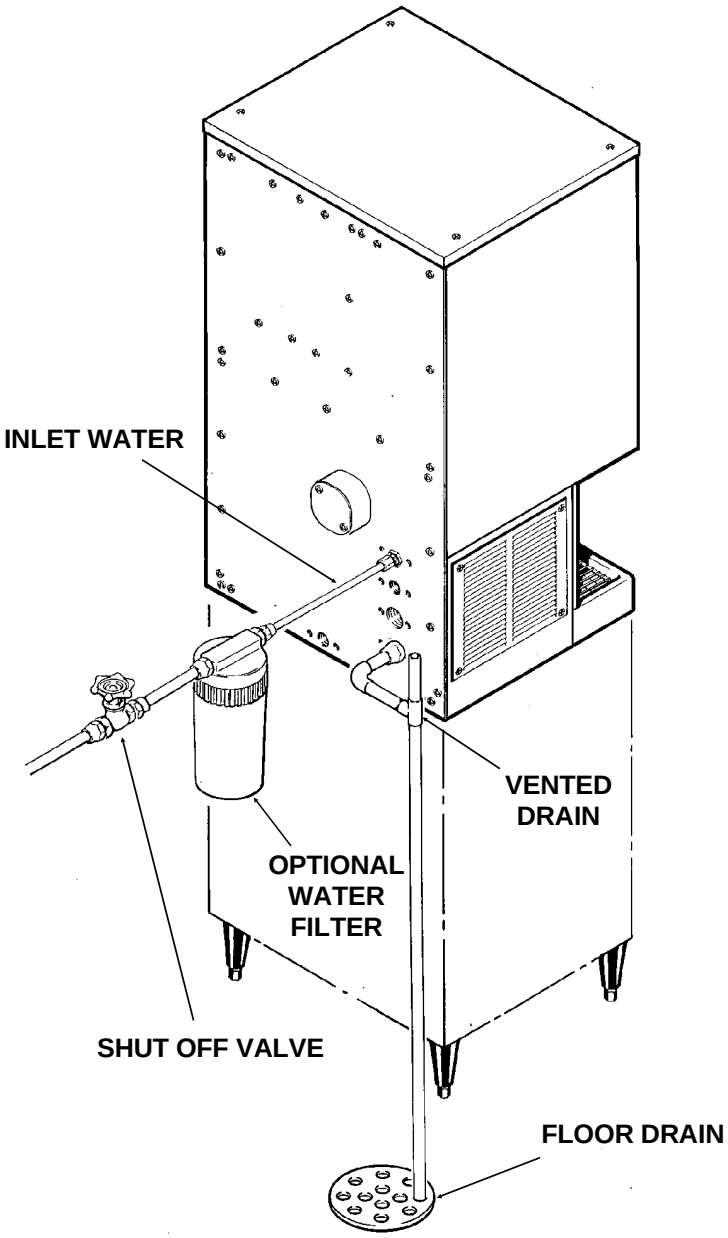

FOR THE ELECTRICIAN

CONFORM TO ALL APPLICABLE CODES

The electrical power to the unit is supplied through the junction box at the rear of the machine.

Check the nameplate (located on the back panel) for the voltage requirements, and for the minimum circuit ampacity. The machine requires a solid chassis to earth ground wire.

The ice maker should be connected to its own electrical circuit so it would be individually fused. Voltage variation must remain within design limitations, even under starting conditions.

All external wiring must conform to national, state, and local electrical codes. The use of a licensed electrician is required to perform the electrical installation.

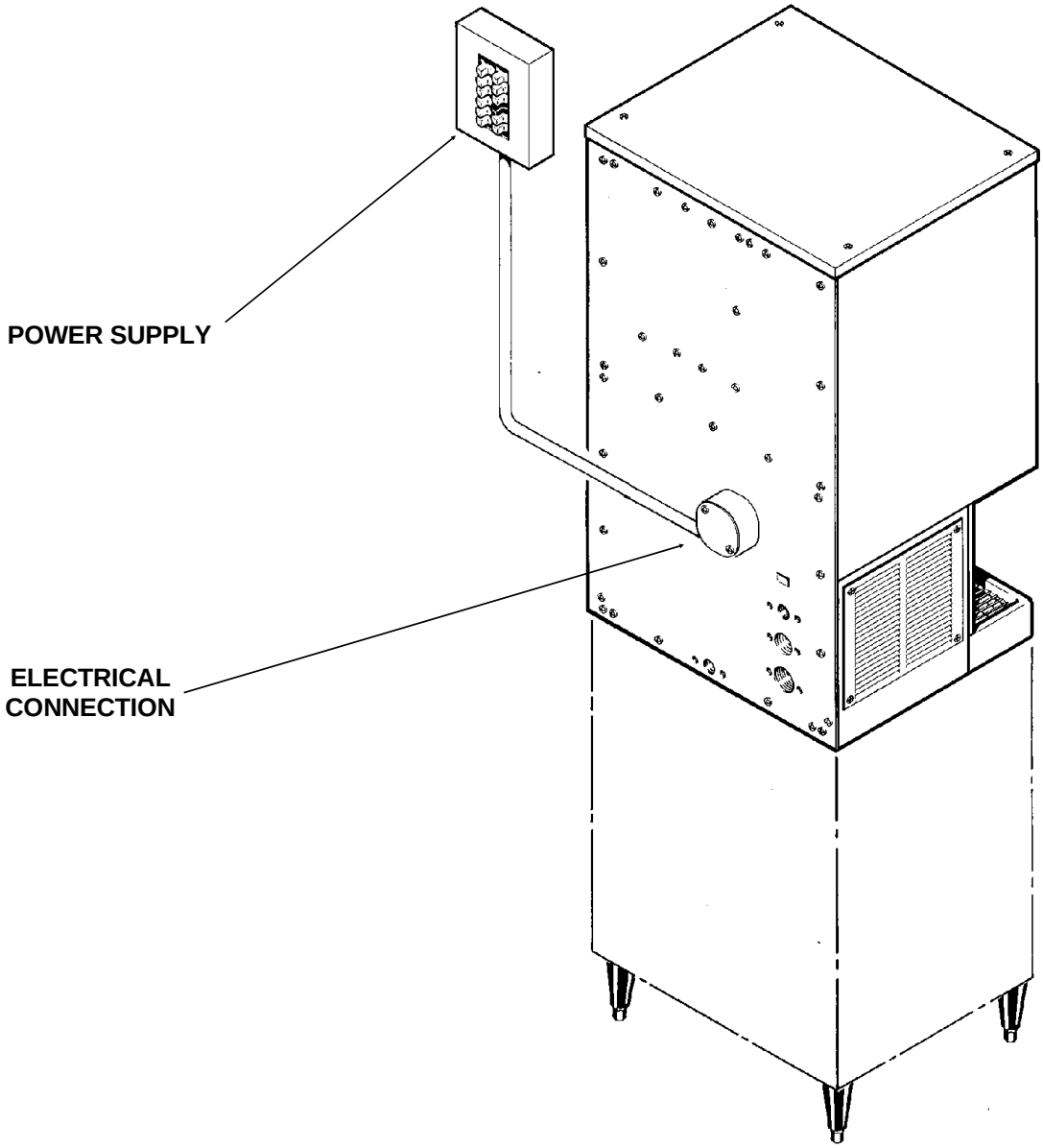

ND750

FOR THE INSTALLER: Final Check List

1. Is the icemaker-dispenser installed indoors, in a location where the air and water temperatures are controlled, and where they do not go beyond design limitations?

2. is there an electrical service disconnect within sight of the installed machine? Is the machine on a separate circuit? Has the voltage been checked and compared to nameplate requirements?

3. Have all of the plumbing connections been made and checked for leaks?

4. Has the machine been leveled?

5. Is there a minimum of 6 inches of clearance at the left and right sides of an air cooled machine?

6. Is there a minimum of 6 inches of clearance at the top and back of the machine for service and utility connections?

7. Is there a water shut off valve installed near the machine?

8. Have all of the shipping blocks been removed?

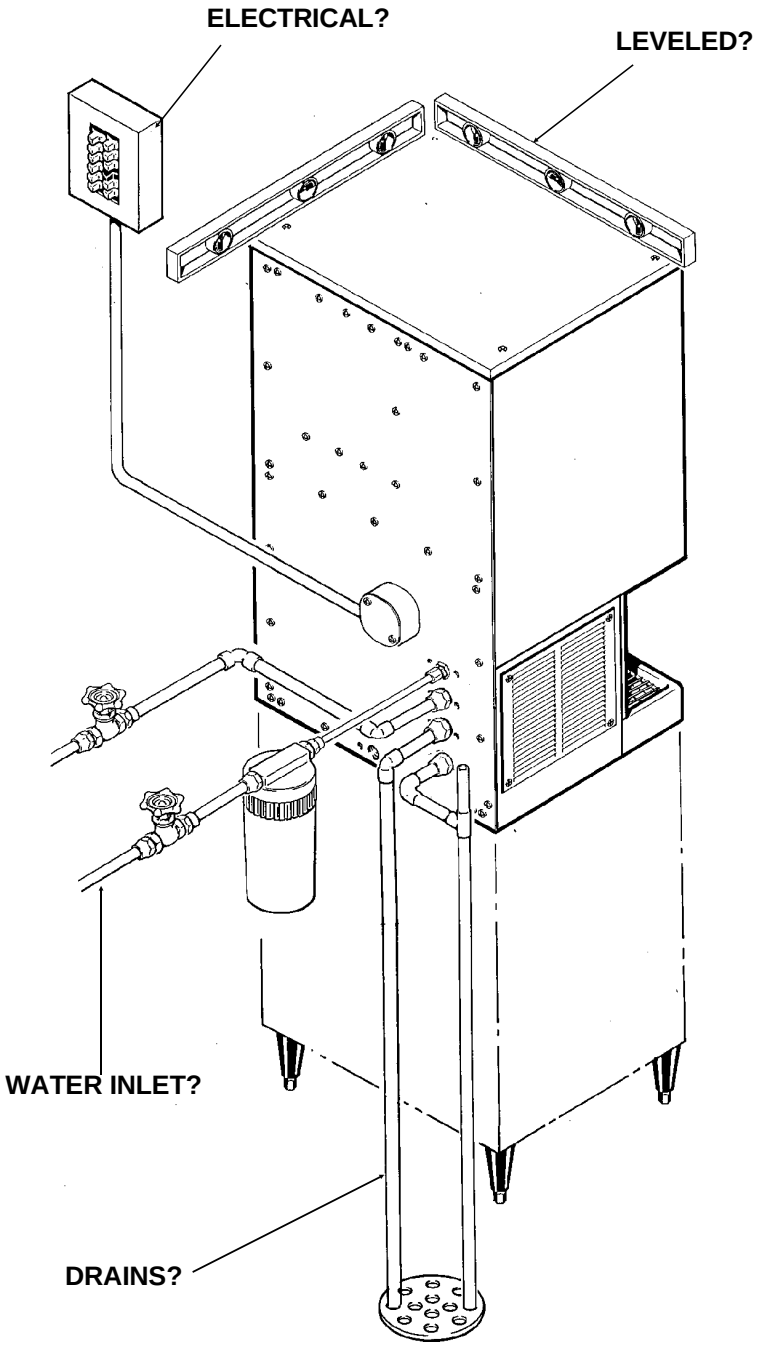

INITIAL START UP

Pre Start Inspection

1. Remove the two front panels.
2. Check that all shipping blocks have been removed.
3. Remove any and all packing tape (check inside the storage bin).
4. Inspect the interior of the machine for loose screws or wires. Check that no refrigerant lines are rubbing each other. Check that the fan blade on air cooled models turns freely.
5. Check that the machine is installed correctly according to the final check list.

Start Up

1. Go through the pre start inspection.

2. Open the water hand valve, observe that water enters the water reservoir, fills the tube from the reservoir to the evaporator and then shuts off. Check for leaks.

3. Switch the master switch on. The electrical start up sequence is now on automatic:

A. There will be a short (15 second) delay before the gearmotor starts.

B. After the gearmotor starts, the compressor will start.

4. On air cooled models, warm air will begin to flow from the condenser. Water cooled models will begin to discharge warm water down the drain.

5. The unit should soon be making ice. If desired, the low side pressure may be checked: it should be 30 PSIG + or - 4 PSIG.

The air cooled discharge pressure will depend upon air and water temperatures, but should be between 200 PSIG and 280 PSIG.

Water cooled discharge pressure should be about 220 PSIG. If needed, adjust the water regulating valve.

The above numbers are for new, clean machines. Field values may be somewhat higher or lower.

6. There are no adjustments to make, so replace the panels.

7. Check ice dispensing by pushing in on the glass filler lever. Ice dispenses are portion controlled; by turning a knob, the length of time the unit dispenses when the glass filler lever is pushed (and the amount of ice dispensed) is adjusted.

8. Switch off the icemaker-dispenser, remove the top panel and the top of the ice storage bin. Sanitize the interior of the ice storage bin by wiping it with a mixture of 1 ounce of household bleach to 1 gallon of water, allow to air dry. Replace all covers and panels. Switch the icemaker-dispenser back on.

9. Give the owner/user the service manual, instruct him/her in the operation and maintenance requirements of the unit. Make sure they know who to call for service.

10. Fill out the warranty registration card, and mail it in to Scotsman.

11. Fill out the field Quality Audit form, and mail it to Scotsman.

COMPONENT DESCRIPTION: Control Box

Contactor: A definite purpose contactor connecting the compressor to the power supply.

Circuit Board: Controlling the ice machine through sensors and relays. The sensors are for ice level and water level. The relays are for the gear motor (with a built in time delay to clear the evaporator of ice when the unit turns off) and for the compressor. The reset switch is mounted on the circuit board.

On/Off Switch: Manual control for the machine.

Transformer: Supplies low voltage to the circuit board.

Potential Relay: The compressor start relay.

Reset Switch: Part of Circuit Board, manual reset. Lights up when unit shuts off from: ice discharge chute being overfilled (opening the microswitch at the top of the chute); low or high pressure switches opening.

Portion Control Module: Controls the amount of time the dipensing drive motor is on. The time is varied by adjusting the portion control knob.

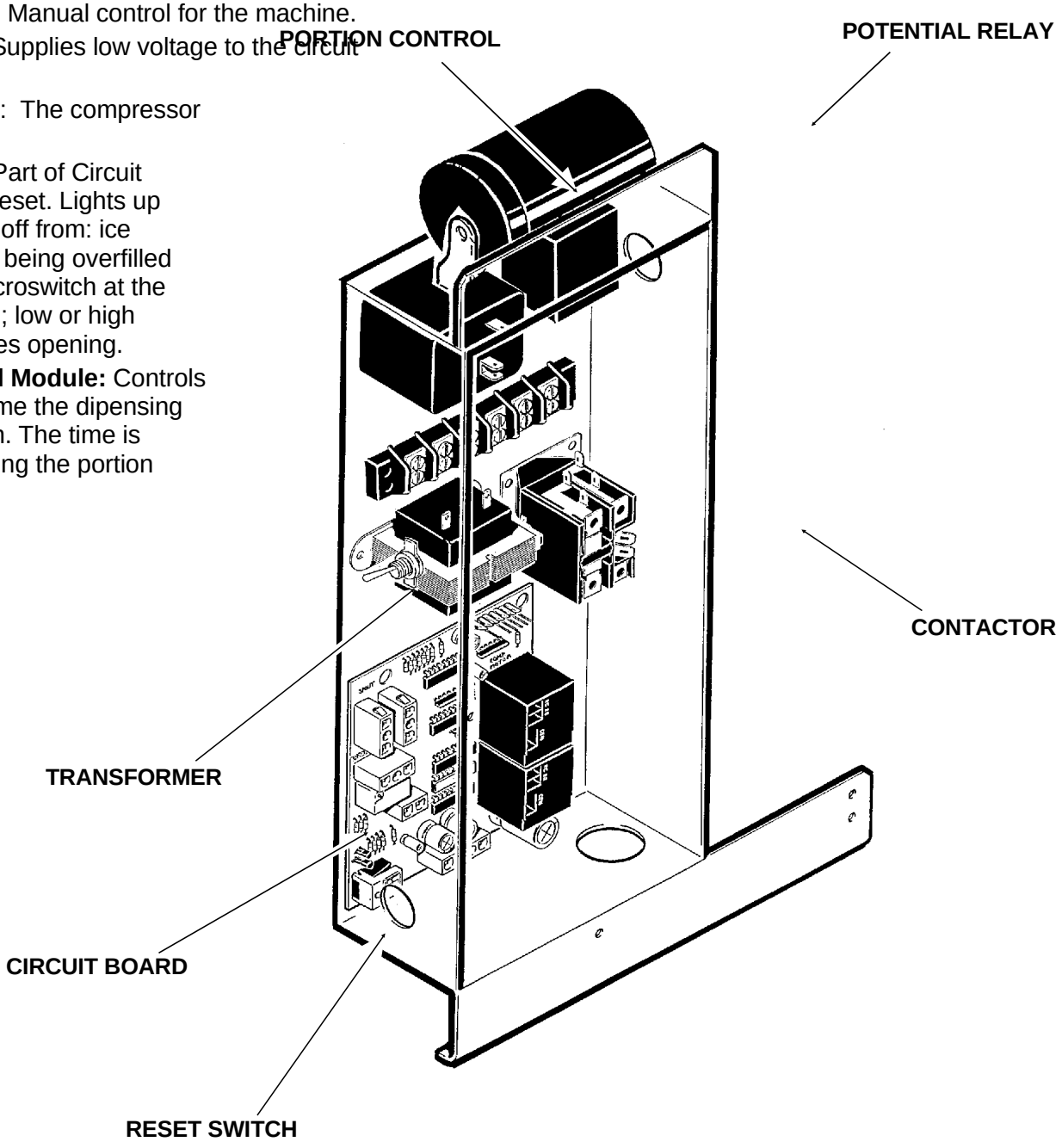

ND750
COMPONENT DESCRIPTION

Evaporator: A refrigerated vertical tube filled with water and containing a water seal and auger.

Auger: A solid stainless steel double spiral auger, it pushes the ice crystals up to the top of the evaporator.

Water Seal: A two part "face" seal, the top half rotating with the auger, the bottom half stationary, the sealing action being where the two seal "faces" meet.

Ice Sweep: A plastic cap with "fingers". It revolves with the auger to "sweep" the ice into the ice chute.

Breaker: Where the ice is compressed and much of the extra water is squeezed out of it before it is discharged into the bin.

Motor: A permanent split capacitor motor that drives the gear reducer.

Thrust Bearing: As the ice is pushed up the evaporator, the auger is thrust down, and pressure from the auger thrust is taken up by this bearing.

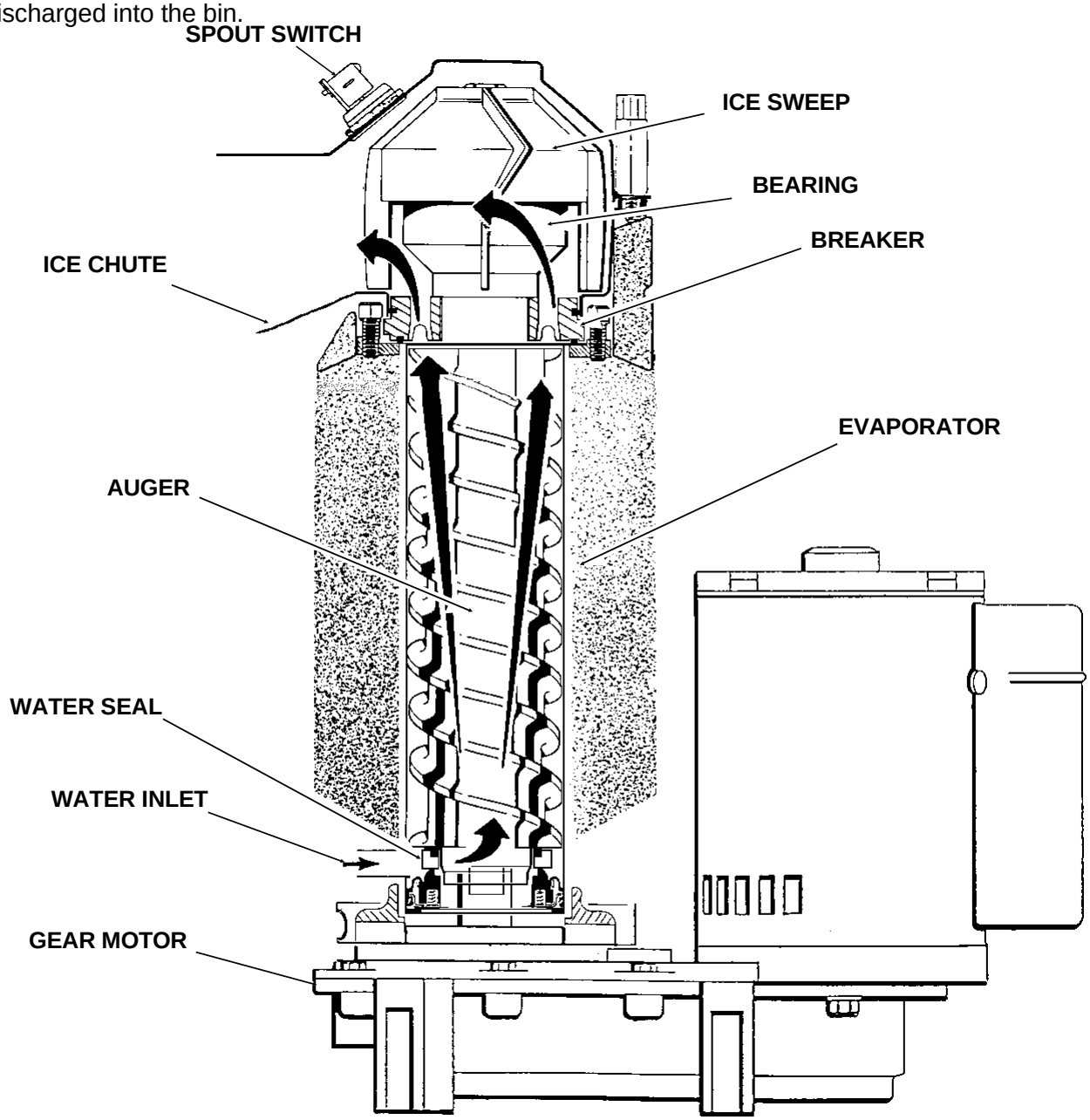

ELECTRICAL SEQUENCE

Refer the wiring diagram as needed.

If the machine is switched off at the master switch, but is otherwise ready to go, switching the master switch to on does the following:

- The bin empty light on the circuit board goes on
- There is a 15 second delay
- If there is enough water in the reservoir, the circuit board will allow the machine to start up.

Start up consists of:

- The compressor relay and auger motor relay become energized, connecting power to the windings of the auger motor.
- The auger motor starts, and the centrifugal switch closes, connecting power to the compressor contactor coil.
- The contactor is energized, connecting power to the compressor, and the compressor starts.
- As ice goes past the ice level sensors, the bin empty light will stay on, and the machine will continue to run, unless the ice stays between the sensors for more than 15 seconds (bin full). At that point, the bin empty light goes out, and the machine shuts down.

Shut Down consists of:

- The compressor relay opens.
- The compressor contactor opens
- The compressor stops
- The auger motor is run by the circuit board for 2.5 more minutes, clearing out ice in the evaporator, and then
- The auger motor relay opens, and the auger motor stops.

If the ice level sensor is clear (bin empty) for more than 15 seconds, the machine will start up again.

Another purpose of the circuit board is to turn the machine off if there is not enough water in the machine.

- When the water level in the reservoir falls below the water level sensor, the machine will “shut down”
- When the water refills the reservoir, the machine will start up again.

Separate from the circuit board:

- If the high pressure control (cut out switch) opens, the machine will stop immediately (through the relays on the circuit board) and cause the reset switch on the circuit board to light up. It must be manually reset at the control and at the reset switch on the circuit board.
- If the low pressure control (cut out switch) opens, the machine will stop immediately (through the relays on the circuit board) and cause the reset switch on the circuit board to light up. It must be manually reset at the control and at the reset switch on the circuit board.
- If the spout switch opens, the machine will stop immediately (through the relays on the circuit board) and cause the reset switch on the circuit board to light up. After it re-closes the reset switch on the circuit board must be manually reset.
- The master switch is the manual control for the complete machine, but it is not a service disconnect.

Ice Vending

- When the glass filler lever is pushed in the vend switch closes. That energizes the ice chute door solenoid, and the portion control module, which, depending upon the setting of the portion control knob, will power the agitator drive motor for a set length of time.
- Holding the glass filler lever in will not cause additional dispensing, unless the portion control is set for continious dispensing. Releasing and re-pushing the glass filler lever will repeat the dispense cycle.

ND750

OPERATION: Ice Vending

When the ice dispensing glass filler lever is pushed, an electrical circuit is made to the ice chute door solenoid causing the ice chute door to open. At the same time power is connected to the portion control module in the control box. That module will energize the agitator drive motor for a certain length of time, depending upon the setting of the portion control knob.

The dispensing takes place when the agitator sweeps the ice through the ice dispensing chute: ice will continue to discharge out this chute as long as the agitator is turning. It stops when the agitator stops.

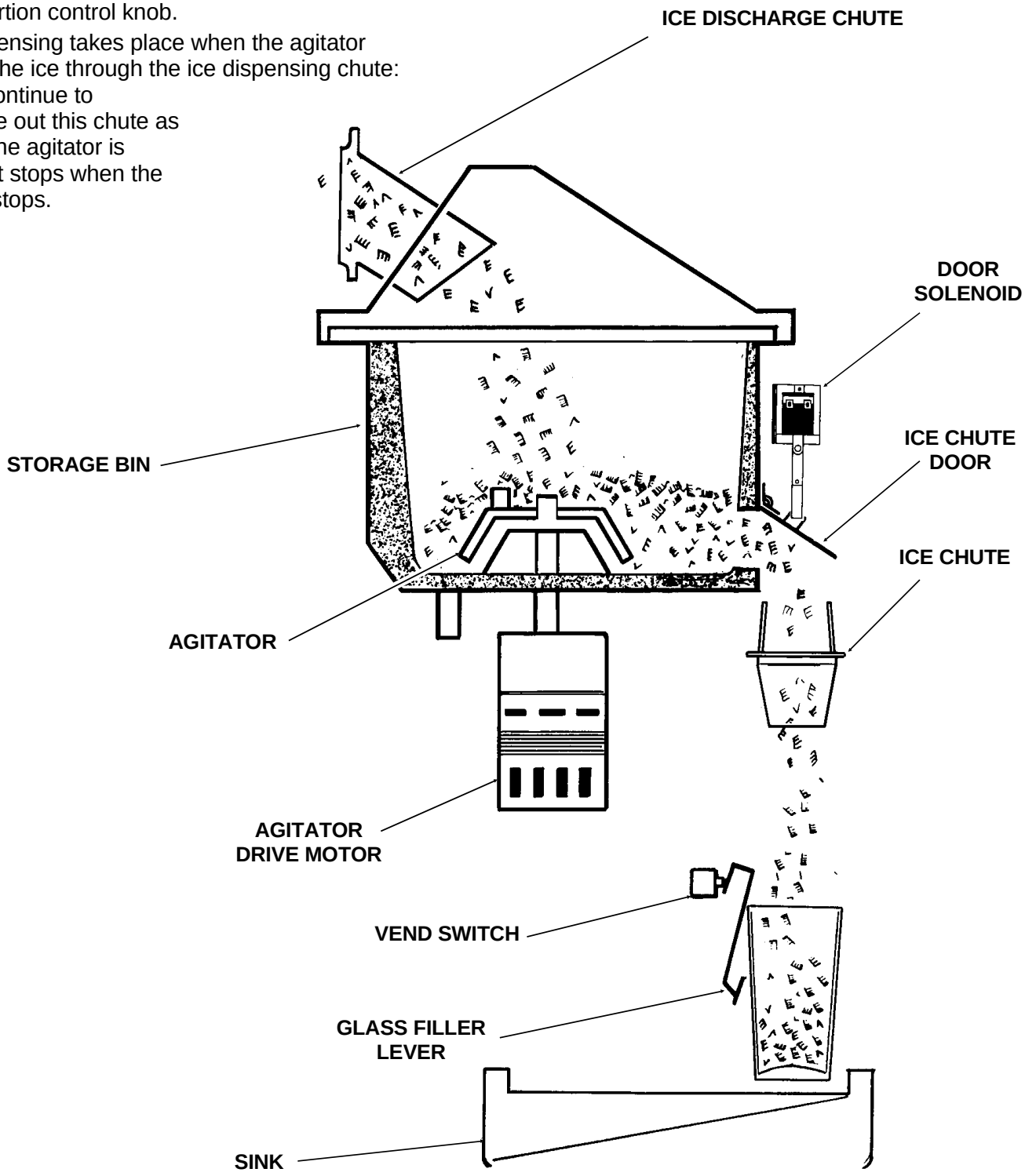

MAINTENANCE AND CLEANING

//

A Scotsman Ice System represents a sizable investment of time and money in any company's business. In order to receive the best return for that investment, it MUST receive periodic maintenance.

It is the USER'S RESPONSIBILITY to see that the unit is properly maintained. It is always preferable, and less costly in the long run, to avoid possible down time by keeping it clean; adjusting it as needed; and by replacing worn parts before they can cause failure. The following is a list of recommended maintenance that will help keep the machine running with a minimum of problems.

Maintenance and Cleaning should be scheduled at a minimum of twice per year.

//

////////////////////////////WARNING///////////////////////////
Electrical power will be ON when doing in place cleaning. Switch it OFF before completing the cleaning procedures.
///

ICEMAKING SYSTEM: In place cleaning

1. Check and clean any water treatment devices, if any are installed.
2. Remove screws and remove the upper front panel.
3. Move the ON-OFF switch to OFF.
4. Remove the cover to the ice storage bin, and remove the ice.
5. Remove the cover to the water reservoir and block the float up.
6. Drain the water reservoir and freezer assembly using the drain tube attached to the freezer water inlet. Return the drain tube to its normal upright position and replace the end cap.

///////////////////////////WARNING/////////////////////////////
Scotsman Ice Machine Cleaner contains Phosphoric and Hydroxyacetic acids. These compounds are corrosive and may cause burns. If swallowed, DO NOT induce vomiting. Give large amounts of water or milk. Call Physician immediately. In case of external contact, flush with water. KEEP OUT OF THE REACH OF CHILDREN.
///

7. Prepare the cleaning solution: Mix eight ounces of Scotsman Ice Machine Cleaner with three quarts of hot water. The water should be between 90-115 degrees F.
8. Slowly pour the cleaning solution into the water reservoir until it is full. Wait 15 minutes, then switch the master switch to ON.
9. As the ice maker begins to use water from the reservoir, continue to add more cleaning solution to maintain a full reservoir.
10. After all of the cleaning solution has been added to the reservoir, and the reservoir is nearly empty, switch the master switch to OFF.
11. After draining the reservoir, as in step 6, wash and rinse the water reservoir.
12. Remove the block from the float in the water reservoir.
13. Switch the master switch to ON
14. Continue ice making for at least 15 minutes, to flush out any cleaning solution. Check ice for acid taste - continue icemaking until ice tastes sweet.

////////////////////////////WARNING//////////////////////////
DO NOT USE any ice produced from the cleaning solution.
Be sure no ice remains in the bin.
///

15. Remove all ice from the storage bin.
16. Add warm water to the ice storage bin and thoroughly wash and rinse all surfaces within the bin.
17. Sanitize the bin interior with an approved sanitizer using the directions for that sanitizer.
18. Replace the ice storage bin cover, and the front panel.

////////////////////////////WARNING////////////////////////////////

Disconnect electrical power before beginning.

//

1. The ice machine senses water level by a probe located in the water reservoir. At least twice a year, the probe should be removed from the reservoir, and the tip wiped clean of mineral buildup.

2. The bin control uses devices that sense light, therefore they must be kept clean enough so that

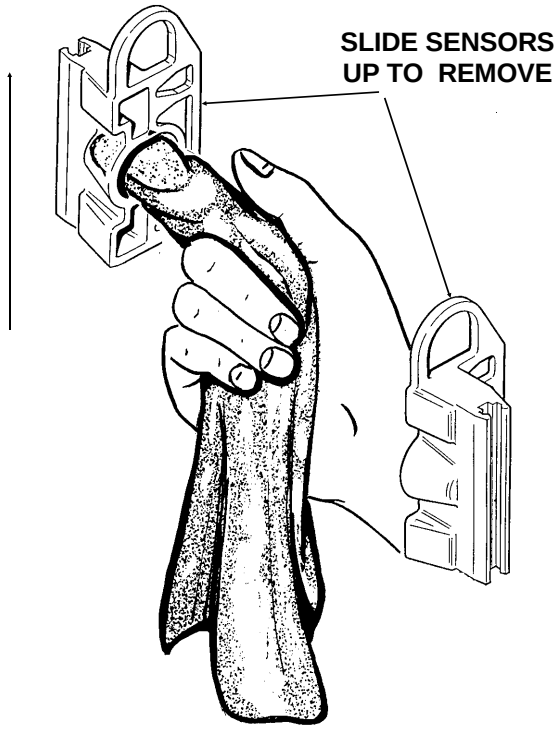

they can “see”. At least twice a year, remove the bin control sensors from the grommets in the ice chute, and wipe them clean.

3. The bearing in the breaker should also be checked at least **two times per year**.

A. Check the bearing by:

- removing the ice chute cover
- unscrewing the ice sweep
- removing the water shed
- using a spanner wrench and unscrewing the breaker cover.
- unscrewing the auger stud

Inspect the assembly, looking for wear.

See Removal and Replacement to replace bearing or seals. Reverse to reassemble.

4. Check and tighten all bolts and screws.

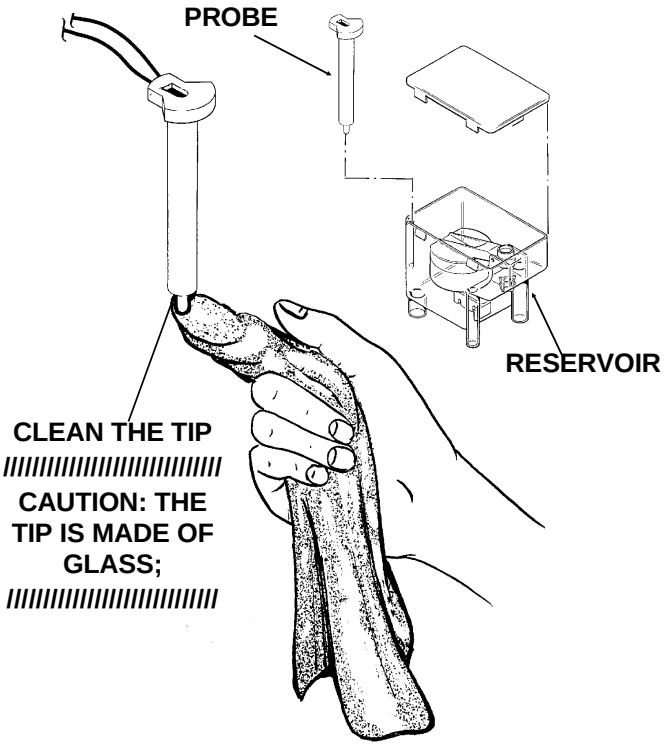

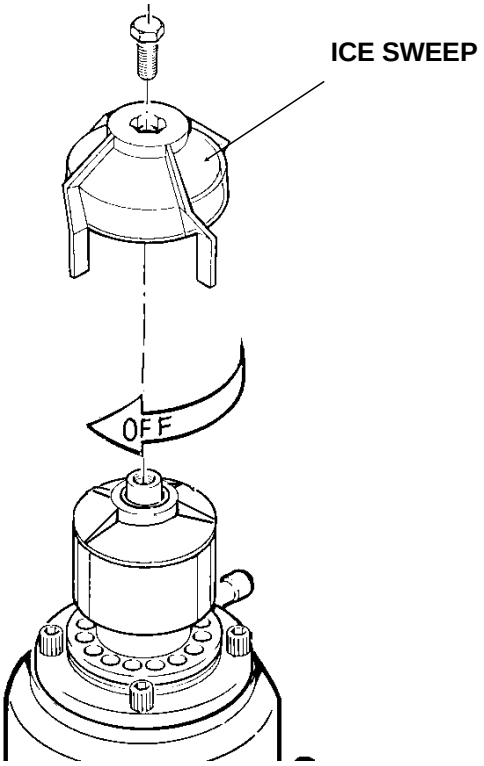

MAINTENANCE AND CLEANING: Auger

In some areas, the water supply to the ice maker will contain a high concentration of minerals, and that will result in an evaporator and auger becoming coated with these minerals, requiring a more frequent removal than twice per year. If in doubt about the condition of the evaporator and auger, the auger can be removed so the parts can be inspected.

Note: Water filters can filter out suspended solids, but not dissolved solids. “Soft” water may not be the complete answer. Check with a water treatment specialist regarding water treatment.

For more information on removal of these parts, see REMOVAL AND REPLACEMENT.

////////////////////////////WARNING//////////////////////////////

Disconnect electrical power, and shut off the water supply.

Use care when removing the auger, it has sharp edges.

//

1. To remove the auger, remove the front and top panels.
2. Drain evaporator using drain hose.
3. Remove 3 hex studs holding ice chute cover to ice chute, and remove cover.
4. Unscrew and remove ice sweep.
5. Loosen band clamp under ice chute, and remove ice chute from evaporator.
6. Remove 4 allen screws holding breaker to evaporator.
7. Pull up to remove auger.

After the auger has been removed, allow the auger to dry: if the auger is not bright and shiny, it must be cleaned.

Clean the auger and evaporator as required. DO NOT HONE THE EVAPORATOR.

8. Replace the water seal.
9. Reverse to reassemble.

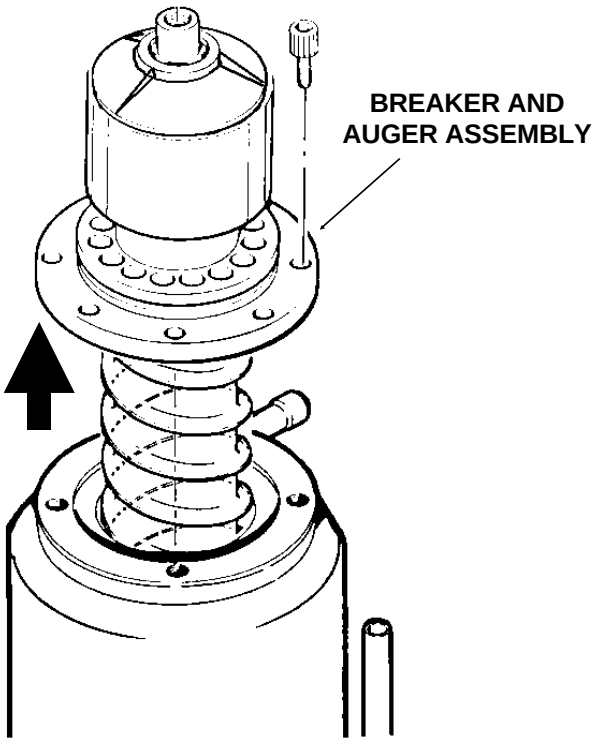

STATUS: *ICE MAKER DOES NOT OPERATE*

A. Check**: Voltage** to the unit, restore it if there is none. Compare to the nameplate.

B. Check**:** The **master switch**, switch ON if off.

C. Check**:** The **3 reset switches**, (circuit board, high and low pressure): depress and release each switch. If the still does not start, check: the spout switch; the high and the low side pressures.

D. Check the **low pressure cut out,** if closed, go to **E;** if it is open, it could be due to**:**

- Low refrigerant charge
- The auger not turning
- Restricted system
- TXV not opening

1. Check the low side pressure, the low pressure cut out opens at pressure below 4 psig. If open, reset and:

a. Check if the **auger** is turning, if it is not, remove the **gearbox** and:

Check for internal damage, repair and replace in the machine.

b. Check for low charge, add some refrigerant, if the unit will operate,(normal low side pressure being about 30 psig) stop and look for a leak, repair, replace the drier, evacuate, and weigh in the nameplate charge. If, with added charge, the unit does **not** operate:

Check for a restricted system, replace the drier, evacuate, and weigh in a nameplate charge.

Check for a **Thermostatic Expansion Valve** that does not open, if defective, replace it. Replace the drier, evacuate, and weigh in the nameplate charge.

E. Check the **high pressure cut out,** if closed, go to **F**; if open:

1.The pressure control opens at 450 psig. **Check** the high side pressure, reset the control, and observe: on water cooled, that water soon begins to flow from the condenser drain; or, on air cooled, that the fan is forcing air through the condenser. If the unit trips out on pressures below 450 psig, replace the control. If the pressures rise above the trip out point, and the unit shuts down:

a. Check for adequate water flow on water cooled, if adequate, clean the interior of the condenser. If the pressures are still too high replace the water regulating valve.

b. Check for adequate air flow on air cooled. Clean the condenser and (if used) the filter. If the air flow is poor because of the installation, advise the user that the unit should be moved, or the air around it kept cooler.

Check the fan motor for tight bearings and proper rotation.

Check that the fan blades are clean, and the fan secure to the fan motor shaft.

F. Check the **spout switch**. It opens from excess pressure of ice inside the ice chute: this should only happen when the machine does not shut off when the ice storage bin is full. This switch will reset when the ice melts, but the machine will not restart until the reset switch on the circuit board is pressed.

G. Check the **water level** in the reservoir. The machine will not run if there is not enough water in the reservoir.

1. Restore/adjust water level. See the next step.

SERVICE DIAGNOSIS: Condition - No Ice Being Produced

STATUS: *ICE MAKER DOES NOT OPERATE*

H. Check: The gear **motor**, if it will not run, the compressor will not run. If no power to it:

Check**:** The **indicator lights** on the circuit board, the **bin empty** light should be ON, the **no water** light should be OFF **.**

1. If the **bin empty** and **no water** lights are off, check the **transformer**.
   a. Transformer "load" side should have 12 to 15 volts. If not, check the "line" side. The line side should have between 110-120 volts. If the line side has the correct voltage and the load side does not, replace the transformer.
2. If the transformer is good, and the **bin empty** light is OFF, check the **ice level sensors**.
   a. Remove sensors by pulling them out of the ice chute grommets. Visually inspect them, clean if needed.
   b. Look through the ice chute "eye" hole for something blocking the ice chute.
   c. If the unit still does not run, replace the ice level sensors.
   d. If the bin empty light is still OFF, check the **circuit board**.
      1. Unplug "opto trans" and "LED" connectors from the circuit board.
      2. Plug "opto trans" and "LED" connectors from the Scotsman Electronic Control Testor Model NM1 into the circiut board.
         a.Move the "bin full" switch on the tester to the full position. The bin full light on the tester should be ON, if not, replace the circuit board.
         If the bin full light on the tester is ON, move the tester switch to "bin empty" the light on the tester should go OFF and the bin empty light on the circuit board should go ON. If not, replace the circuit board. If it does as above, and the machine still does not run, replace the ice level sensors.
3. If the transformer is fine, and the "no water" light is ON, check the **water level sensor.**
   a. Check the water level in the **reservoir,** restore if low. If the water level is ok:
   b. Remove the water level sensor from the reservoir and clean the tip if dirty.
   CAUTION: THE TIP IS MADE OF GLASS
   c**.** Replace the water level sensor. If the no water light is still on, check that the "water sen" plug is firmly plugged into the circuit board.
   d. If the no water light is still on,
      1. Unplug the "water sen" connector from the circuit board.
      2. Plug "water sen" connector from the Scotsman Electronic Control tester into the circuit board.
         a. Move the water switch on the tester to "no water" and the no water light on the circuit board should go on. If not, replace the board.
         b. Move the water switch to the "water" position, the no water light should go off, if not, replace the circuit board.
         c. If after the above, the machine still will not run, replace the water level sensor

MORE INFORMATION ON THE TESTER MAY BE FOUND AT THE BACK OF THE MANUAL.

ND750

SERVICE DIAGNOSIS: Condition - No Ice Being Produced

STATUS: *GEARMOTOR OPERATES, COMPRESSOR DOES NOT*

A. Check the **compressor relay.**

The relay is on the circuit board, if it does not supply power to the contactor coil, the compressor will not run.

1**.** Check for power at the contactor coil, if none:

a**.** Check for power at the compressor relay at the circuit board.

If there is power at the relay, but none at the contactor coil,

Check for an open wire between the relay and the contactor.

2**.** Check the contactor coil. If the coil is open, replace the contactor.

3**.** Check the auger drive motor centrifugal switch. If, when the drive motor is running, contact 4 (black wire removed) has no power, and all of the above switches have been checked, replace the centrifugal switch, or the drive motor.

4**.** If the compressor relay on the circuit board has power on the NO contact, but not on the COM contact, replace the circuit board

B. **Check the compressor**

1. Check the compressor start relay.
2. Check the start capacitor.
3. Check the windings of the compressor for open windings or shorts to ground.

Replace those items found defective.

SERVICE DIAGNOSIS: Condition - Low Ice Production

STATUS: *EVERYTHING IS OPERATING*

A. Check the air cooled condenser for dirt. Clean as required. Check the head pressure on water cooled. Adjust as required. If the head pressure is very high:

1. Air cooled. Check for high air temperatures, or restrictive air flow. Correct as needed.
2. Water cooled. Check for high water temperatures, or low water pressure. Correct as needed.
3. The refrigerant may contain non condensable gases, purge, evacuate, and recharge per nameplate.

B. Check the evaporator

1. Clean the evaporator, the mineral build up will adversely affect the ice machines production.
2. Check the evaporator for water leaks, replace the water seal if found to be leaking.
3. Check the low side pressure; normal is about 30 psig. If low, assume a refrigerant leak, locate, repair and recharge.
   If no leak, the TXV may be restricted, defective or not adjusted properly. If needed, replace the TXV, evacuate, and recharge per nameplate.
4. Check the insulation on the evaporator. It should be dry, with no wet spots or frost.
   If the insulation has failed: replace the evaporator or add extra insulation in the form of foam tape to the evaporator.

C. Check the compressor.

1. The compressor may be inefficient.
   a. Check the amp draw, if low change the compressor.
   b. if the amp draw is normal, pinch off the suction line to check the pull down capability of the compressor. The compressor should pull down to 25 inches of vacuum and hold there for three to five minutes.

SERVICE DIAGNOSIS: Condition - Poor or No Ice Dispensing

STATUS: *There is power to the unit, but no ice is dispensed*

A. Check for ice in the bin, if no ice, check the ice making system.

If the ice making system is normal, the demand for ice may exceed the quantity the icemaker cam produce. Check with the user on ice usage: advise the user that another machine may be needed.

B. Check for motion in the agitator when the glass filler lever is pushed, if no motion: Check the vend switch, if it does not close when the glass filler lever is pushed, replace the switch.

If the vend switch does close, check for voltage at the agitator drive motor. If there is voltage, and the agitator motor output shaft does not turn, replace the agitator gear motor assembly.

C. Check that the ice dispensing door opens when the glass filler lever is pushed. If not, check the vend switch. If the vend switch is good, check the door solenoid.

If the agitator moves when it is supposed to, and there is ice, the dispensing cycle should be fine. is dispensed, check for an obstruction in the ice chute.

D. No portion control.

1. Continuous dispensing when the glass filler lever is pushed in: Check for an open potentiometer (portion control). If open, replace it.

   If it is not open, replace the portion control module in the control box.

2. Very short dispensing: Check for a shorted potentiometer (portion control). If shorted, replace it.

   If it is not shorted, replace the portion control module in the control box.